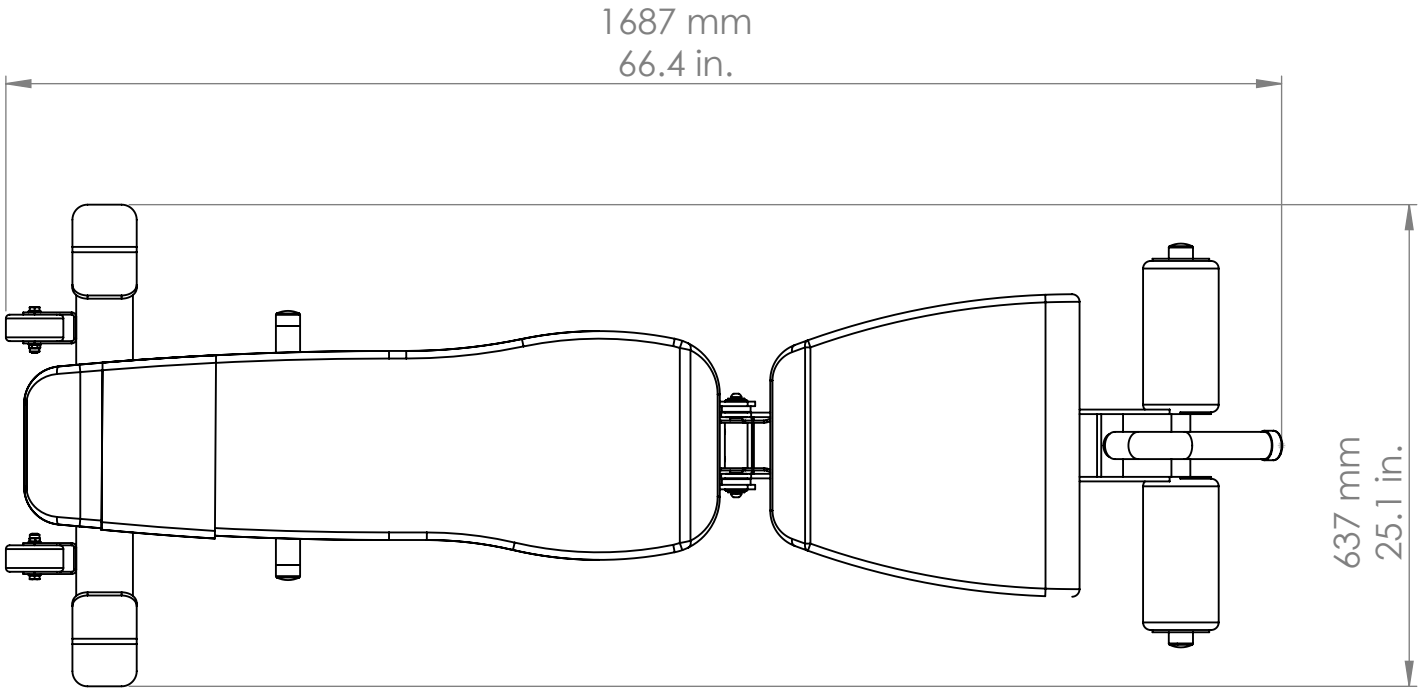
1687 mm
66.4 in.
637 mm
25.1 in.