Body-Solid®

Built for Life

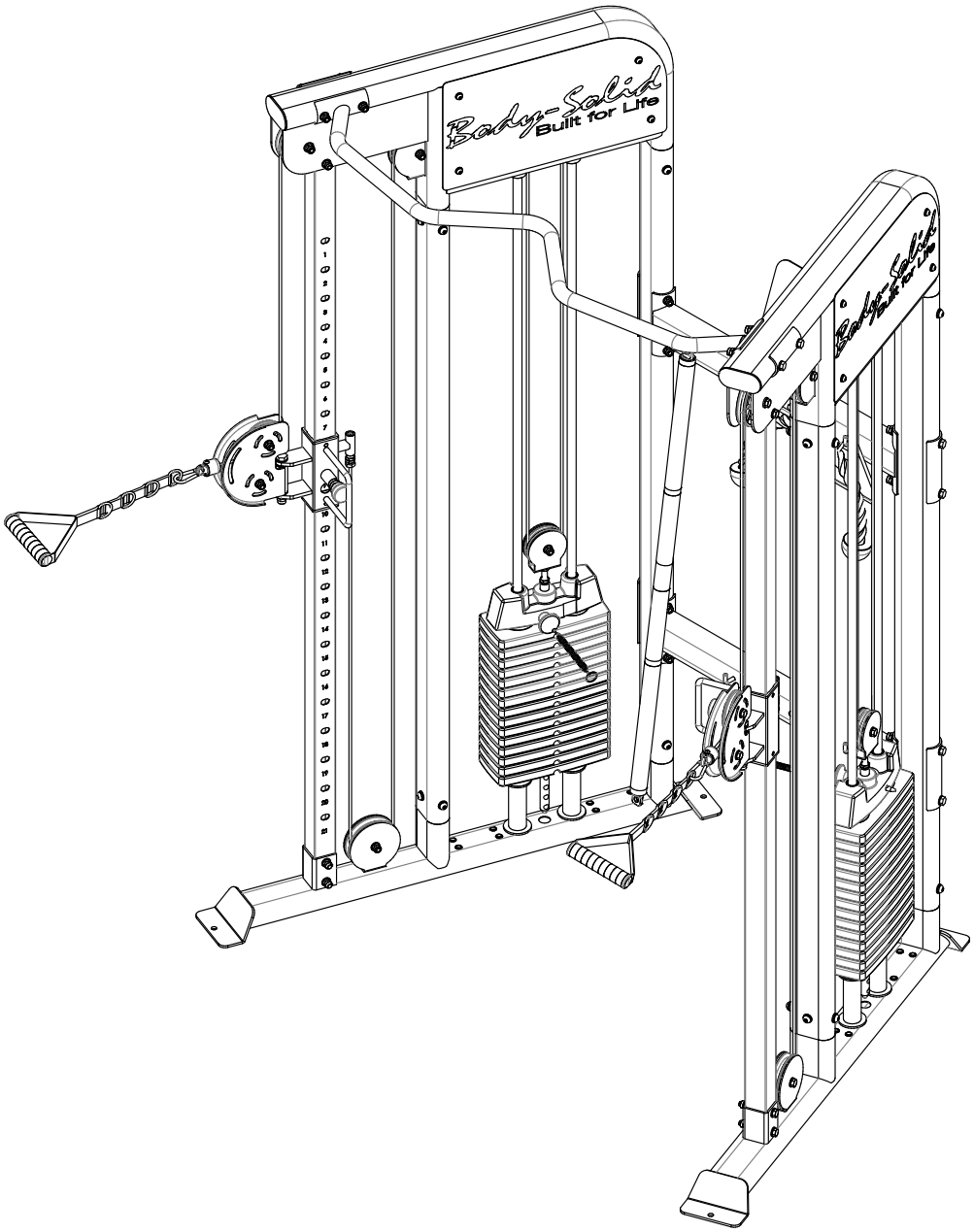

GFT100N

Assembly & Instructions

OWNER'S & MANUAL

V. GFT100-260526

Be sure that all users carefully read and understand all warning, safety and maintenance labels on the machine before each use. Failure to do so may result in death or serious injury.

It is imperative that you retain this Owner's Manual and be sure all warning labels are legible and intact. Replacement Owner's Manuals and warning labels are available from your local Body-Solid dealer.

If you have any questions about the operation, set up or maintenance of this machine please call our customer service department at 1 (800) 556-3113.

THERE IS A RISK ASSUMED BY INDIVIDUALS WHO USE THIS TYPE OF EQUIPMENT. TO MINIMIZE RISK, YOU MUST FOLLOW THESE RULES:

1. Inspect equipment before each workout. Check that all nuts, bolts, screws and pop pins are in place and fully tightened. Also, before use, check cables for signs of wear. Replace all worn parts immediately. Never use machine if any parts are damaged or missing. **FAILURE TO FOLLOW THESE RULES MAY RESULT IN SERIOUS INJURY.**
2. Keep clear of the cables and all moving parts when the machine is in use.
3. Always make sure all Snap Links are closed when doing any cable/pulley/strap exercises.
4. Exercise with care. Perform your exercises at a smooth moderate pace; never perform jerky or uncoordinated movements that may cause injury.
5. It is recommended that you should workout with a training partner.
6. Do not allow children or minors to play on or around this equipment.
7. If unsure of proper use of equipment, call your local Body-Solid distributor or the Body-Solid customer service department at 1-800-556-3113.
8. WARNING: Consult your physician before starting your exercise program. For your own safety, do not begin any exercise program without proper instruction. RAL8-6-03 WC-54

DANGER

MAXIMUM 1 USER AT A TIME

Usage by two or more users is not permitted at any time.
Death or serious injuries will result with improper exercise.
Use only the weight stack supplied by the manufacturer.
DO NOT add additional resistance, unauthorized accessories or attachments to the machine.
Never pin the weight stack or top plate into an elevated position.

WARNING

Safety and Maintenance of Cables

IMPORTANT: Cables are wear items. It is your responsibility to prevent unexpected breakage. **Cable inspection should be performed daily.** Inspect all cables, the nylon coating on all cables, and the area near the fitting at each end of each cable. **Replace any damaged or worn cable immediately.** Do not allow the machine to be used until damaged or worn cables are replaced. Using or allowing a machine to be used with a suspect cable can result in serious injury. See Owner's Manual for more information.

For Body-Solid Customer Service
Call 1-800-556-3113

MAINTENANCE SCHEDULE

Check the function and integrity of the following components. As noted, Inspect equipment before each workout. Replace all damaged, broken or worn components immediately.

	DAILY	WEEKLY
Cables: Check tension, end fittings, and coating	✓	
Check that locking nut at weight stack is tight		✓
Upholstery: Wipe down and dry	✓	
Clean and condition		✓
Frame: Wipe down and dry	✓	
Polish / Wax		✓
Chrome: Wipe down and dry	✓	
Polish / Lubricate		✓
Nuts / Bolts / Fasteners: Tighten and / or adjust as needed		✓
Guide Rods: Lubricate and clean		✓
Linear Rods: Lubricate and clean		✓
Seat Sleeves: Lubricate and clean		✓
Adjustments / Locking Pins / Tightening Knobs		✓
Weight Stack Pins		✓
Warning Instruction Labels		✓
Springs / Pop Pins	✓	
Anti Skid Surfaces		✓
Hand Grips / Rollers		✓

For Body-Solid Customer Service
Call 1-800-556-3113
#MSSTKR0803

WARNING

Bolt machine to the ground before use

Table of Contents

- SAFETY INSTRUCTIONS..... PAGE 4
- PREPARATION..... PAGE 5
- PART / HARDWARE LIST..... PAGE 6
- HARDWARE ILLUSTRATION..... PAGE 8
- ASSEMBLY INSTRUCTIONS..... PAGE 14
- EXPLODED VIEW..... PAGE 26
- CONTACT PAGE..... PAGE 28

Important Safety Instructions

Before beginning any fitness program, you should obtain a complete physical examination from your physician.

Il est conseille de subir un examen medical complet avant d'entreprendre tout programme d'exercise. Si vous avez des etourdissements ou des faiblesses, arretez les exercices immediatement.

Antes de comenzar cualquier programma de ejercicios, deberias tener un examen fisico con su doctor.

When using exercise equipment, you should always take basic precautions, including the following:

- Read all instructions before using the **GFT100N**. These instructions are written to ensure your safety and to protect the unit.
- **Do not remove any safety labels from the machine.**
- Do not allow children on or near the equipment.
- Use the equipment only for its intended purpose as described in this guide. Do not use accessory attachments that are not recommended by the manufacturer. Such attachments might cause injuries.
- Wear proper exercise clothing and shoes for your workout, no loose clothing.
- Keep hands, limbs, loose clothing, and long hair well out of the way of all moving parts.
- Use care when getting on or off the unit.
- Do not overexert yourself or work to exhaustion.
- If you feel any pain or abnormal symptoms, stop your workout immediately and consult your physician.
- Never operate unit when it has been dropped or damaged. Return the equipment to a service center for examination and repair.
- Never drop or insert objects into any opening in the equipment.
- Always check the unit and its cables before each use. Make sure that all fasteners and cables are secure and in good working condition.
- Do not use the equipment outdoors or near water.

Personal Safety During Assembly

- Before beginning assembly, please take the time to read the instructions thoroughly.
- Read each step in the assembly instructions and follow the steps in sequence. Do not skip ahead. If you skip ahead, you may learn later that you have to disassemble components and that you may have damaged the equipment.
- Assemble and operate the **GFT100N** on a solid, level surface. Locate the unit a few feet from the walls or furniture to provide easy access.

The **GFT100N** is designed for your enjoyment. By following these precautions and using common sense, you will have many safe and pleasurable hours of healthful exercise with your Body-Solid **Functional Trainer.**

After assembly, you should check all functions to ensure correct operation. If you experience problems, first recheck the assembly instructions to locate any possible errors made during assembly. If you are unable to correct the problem, call the dealer from whom you purchased the machine or call **1-800-556-3113** for the dealer nearest you.

Obtaining Service

Please use this Owner's Manual to make sure that all parts have been included in your shipment. When ordering parts, you must use the part number and description from this Owner's Manual. Use only Body-Solid replacement parts when servicing this machine. Failure to do so will void your warranty and could result in personal injury.

For information about product operation or service, check out the official Body-Solid website at www.bodysolid.com or contact an authorized Body-Solid dealer or a Body-Solid factory-authorized service company or contact Body-Solid customer service at one of the following:

Toll Free: 1-800-556-3113
Phone: 1-708-427-3555
Fax: 1-708-427-3556
Hours: M-F 8:30-5:00 CST
E-Mail: service@bodysolid.com

Or write to: **Body-Solid, Inc.**
Service Department
1900 S. Des Plaines Ave.
Forest Park, IL 60130 USA

Retain this Owner's Manual for future reference. If you need to order replacement parts please be prepared to provide the following information when contacting us so that we can assist you better.

1. Model Number
2. Place of Purchase
3. Serial Number (S/N)
4. Part # and Description

Preparation

Thank you for purchasing the **GFT100N**. This Product is part of the Body-Solid line of quality strength training machines, which lets you target specific muscle groups to achieve better muscle tone and overall body conditioning. To maximize your use of the equipment please study this Owner's Manual thoroughly.

Required Tools

The basic tools that you must obtain before assembling the **GFT100** include but are not limited to:

- Standard Wrench Set
- Metric Wrench Set
- Adjustable Wrench

Installation Requirements

Follow these installation requirements when assembling the **GFT100N**:

Set up the **GFT100N** on a solid, flat surface. A smooth, flatsurface under the machine helps keep it level. A level machine has fewer malfunctions.

Provide ample space around the machine. Open space around the machine allows for easier access.

Insert all bolts in the same direction. For aesthetic purposes, insert all bolts in the same direction unless specified (in text or illustrations to do otherwise.

Leave room for adjustments. Tighten fasteners such as bolts, nuts, and screws so the unit is stable, but leave room for adjustments. Do not fully tighten fasteners until instructed in the assembly steps to do so.

Fill out and mail the warranty card.

Assembly Tips

Read all "Notes" on each page before beginning each step.

While you may be able to assemble the **GFT100N** using the illustrations only, important safety notes and other tips are included in the text.

Some pieces may have extra holes that you will not use. Use only those holes indicated in the instructions and illustrations.

NOTE: With so many assembled parts, proper alignment and adjustment is critical. While tightening the nuts and bolts, be sure to leave room for adjustments.

CAUTION: Obtain assistance! If you feel like you can't assemble the **GFT100N** by yourself then do not attempt to do so as this could result in injury. Review the installation requirements before proceeding with the following steps.

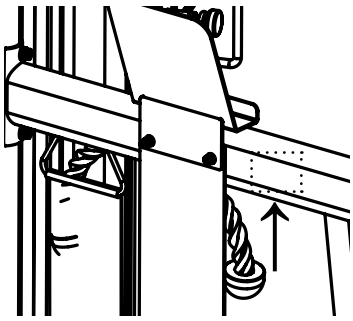

Your S/N# can be found here

Body-Solid continually seeks ways to improve the performance, specifications and product manuals in order to ensure that only superior products are released from our factories. Please take the time to carefully read through this manual thoroughly. Instructions contained in this document are not intended to cover all details or variations possible with Body-Solid equipment, or to cover every contingency that may be met in conjunction with installation, operation, maintenance or troubleshooting of the equipment. Even though we have prepared this manual with extreme care, neither the publisher nor the author can accept responsibility for any errors in, or omission from, the information given. Should additional information be required, or should situations arise that are not covered by this manual, the matter should be directed to your local Body-Solid representative, or the Service Department at Body-Solid Inc. in Forest Park, Illinois.

GFT100N Parts & Hardware List

Part#	Qty	Description
A	2	BASE FRAME
B	2	MIDDLE UPRIGHT
C	2	REAR UPRIGHT
D	2	FRONT CHROME UPRIGHT
E	2	TOP FRAME
F	4	CHROME GUIDE ROD
G	2	DOUBLE PULLEY BRACKET
H	1	RIGHT SLIDING HANDLE
J	4	UPRIGHT BRACKET
K	2	PULLEY BRACKET
N	1	STORAGE TRAY
P	1	PLACARD PLATE
Q	1	LEFT SLIDING HANDLE
R	4	WEIGHT RISER
S	2	LEFT LOGO PLATE
T	2	RIGHT LOGO PLATE
U	2	CHIN UP BAR BRACKET
V	1	CHIN UP BAR
W	2	CENTER CROSSMEMBER
1	2	M12x115mm HEX HEAD BOLT
2	12	M10x125mm HEX HEAD BOLT
3	8	M10x80mm HEX HEAD BOLT
4	14	M10x50mm HEX HEAD BOLT
5	24	M10x20mm BUTTON HEAD CAP SCREW
6	2	M8x75mm HEX HEAD BOLT
7	2	M8x70mm HEX HEAD BOLT
8	16	M8x15mm BUTTON HEAD CAP SCREW
9	4	M8x8mm SET SCREW
10	4	M6x12mm BUTTON HEAD CAP SCREW
11	2	M10x50mm SOCKET HEAD CAP SCREW
12	4	M12 WASHER
13	88	M10 WASHER
14	26	M10 LOCK WASHER
15	24	M8 WASHER

GFT100N Parts&Hardware List

Part#	Qty	Description
16	2	M12 NYLON LOCK NUT
17	32	M10 NYLON LOCK NUT
18	4	M8 NYLON LOCK NUT
19	6	M12 HEX NUT
20	2	M12 LOCK WASHER
21	16	M8 LOCK WASHER
22	10	PLASTIC PULLEY, ø117mm
23	4	ALUMINUM PULLEY, ø90mm
24	2	PLASTIC PULLEY, ø90mm
25	2	CABLE CONNECTOR BOLT
26	2	CABLE CONNECTOR
27	2	ACCESSORY CONNECTOR
28	4	PULLEY SPACER
29	2	CABLE
30	2	TOP PLATE
31	4	RUBBER DONUT
32	2	WEIGHT SELECTOR ROD
33	2	WEIGHT SELECTOR PIN
34	2	POP PIN
35	4	NYLON BUSHING
36	4	METAL BUSHING
37	4	SHAFT COLLAR
38	1	LONG STRAIGHT BAR
39	1	TRICEP ROPE
40	1	LONG STRAP
41	2	SNAP LINK
42	2	STRAP HANDLE
43	1	EXERCISE PLACARD

GFT100N Hardware Illustration

Part #1 HEX HEAD BOLT M12x115mm QTY. 2

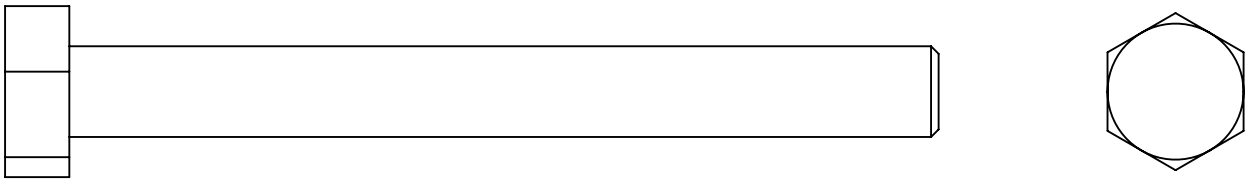

Part #2 HEX HEAD BOLT M10x125mm QTY. 12

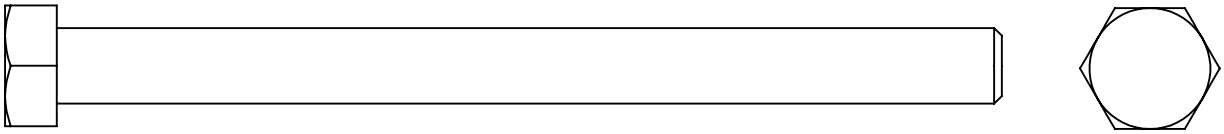

Part #3 HEX HEAD BOLT M10x80mm QTY. 8

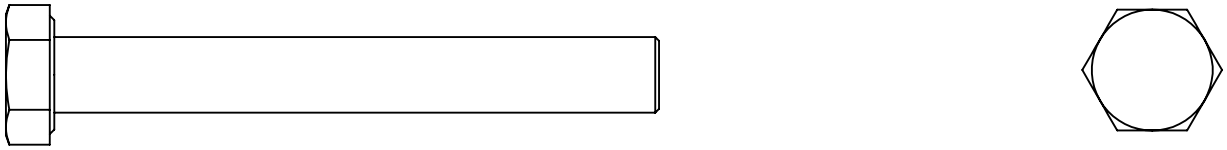

Part #4 HEX HEAD BOLT M10x50mm QTY. 14



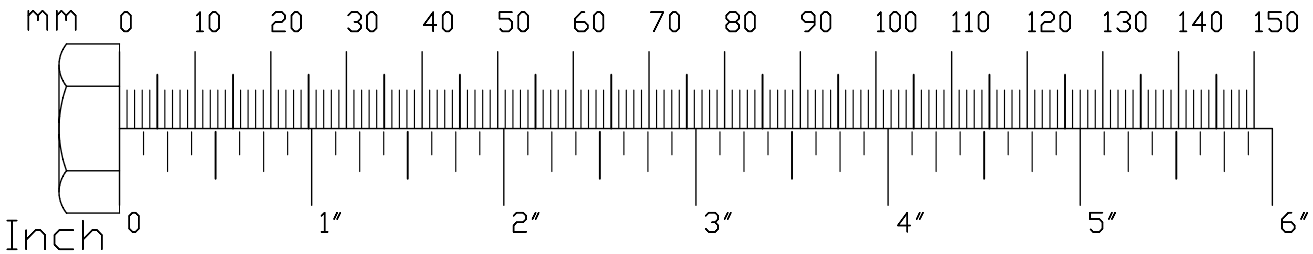

GFT100N Hardware Illustration

Part #5 BUTTON HEAD CAP SCREW M10x20mm QTY. 24

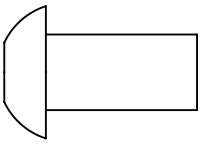

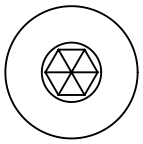

Part #6 HEX HEAD BOLT M8x75mm QTY. 2

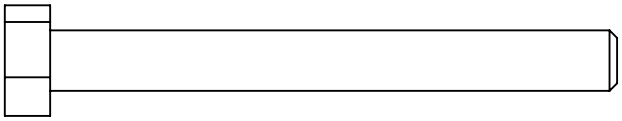

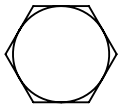

Part #7 HEX HEAD BOLT M8x70mm QTY. 2

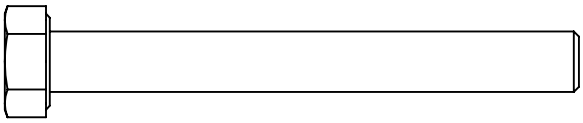

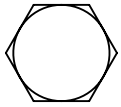

Part #8 BUTTON HEAD CAP SCREW M8x15mm QTY. 16

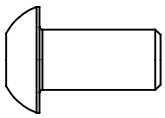

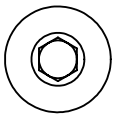

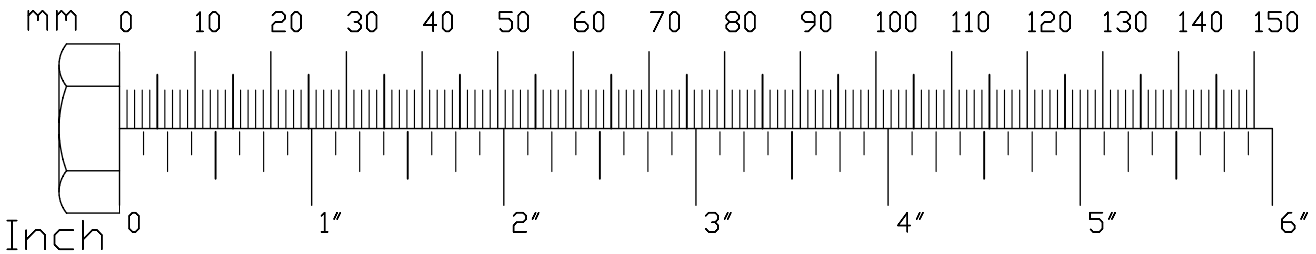

GFT100N Hardware Illustration

Part #9 SET SCREW M8x8mm QTY. 4





Part #10 BUTTON HEAD CAP SCREW M6x12mm QTY. 4

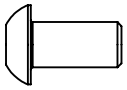



Part #11 SOCKET HEAD CAP SCREW M10x50mm QTY. 2

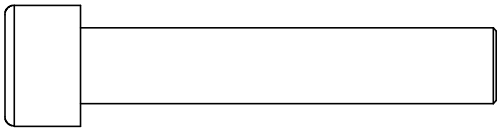

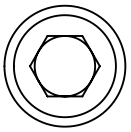

Part #12 M12 WASHER QTY. 4

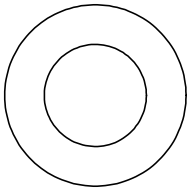



Part #13 M10 WASHER QTY. 88

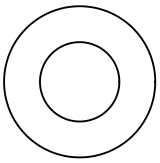



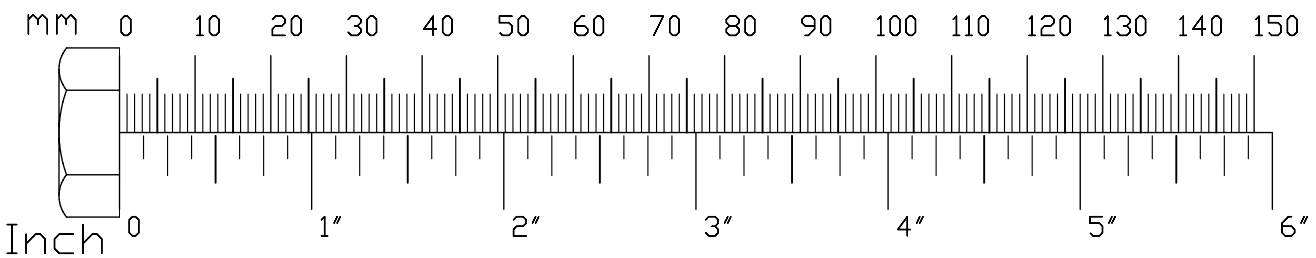

Part #14 M10 LOCK WASHER QTY. 26

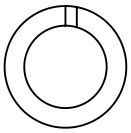



Part #15 M8 WASHER QTY. 24

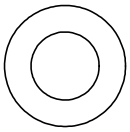



Part #16 M12 NYLON LOCK NUT QTY. 2

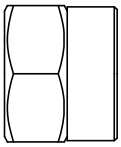

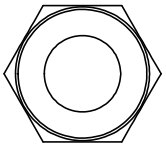

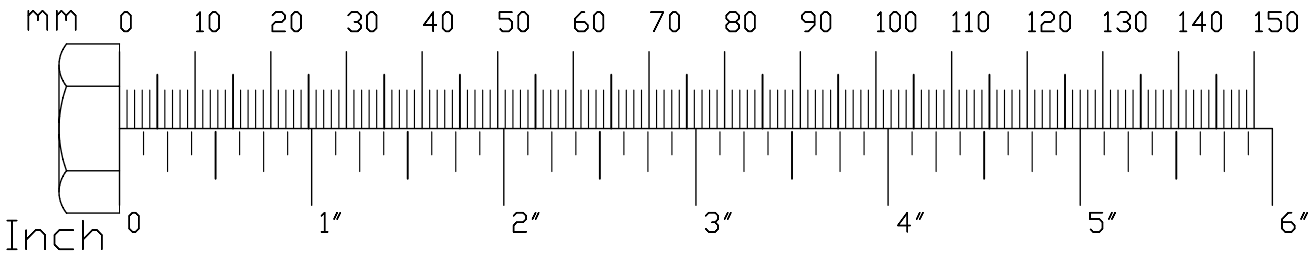

Part #17 M10 NYLON LOCK NUT QTY. 32



Part #18 M8 NYLON LOCK NUT QTY. 4



Part #19 M12 HEX NUT QTY. 6



Part #20 M12 LOCK WASHER QTY. 2



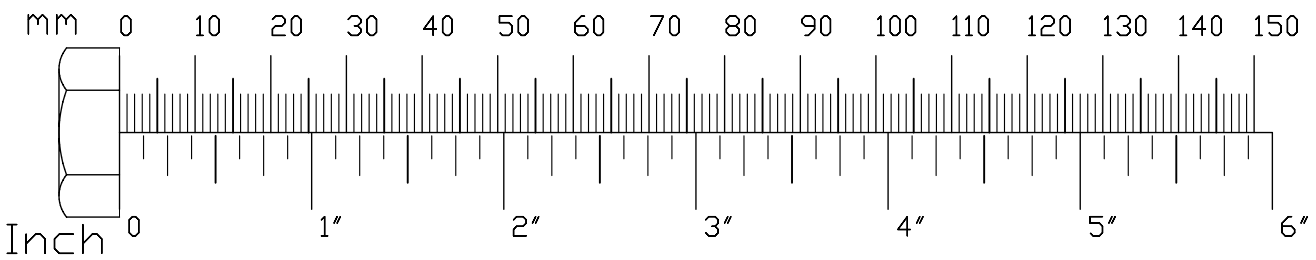

Part #21 M8 LOCK WASHER QTY. 16

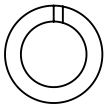



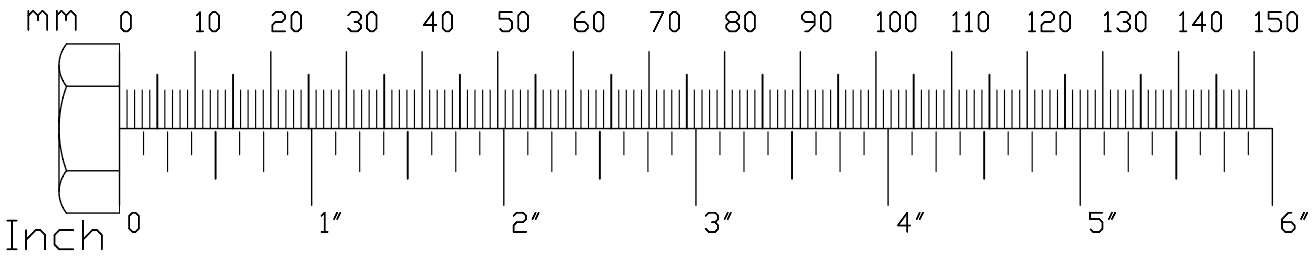

STEP 1

Be careful to assemble all components in the sequence they are presented.

NOTE:

Finger tighten all hardware in this step. DO NOT wrench tighten until instructed. Some components may be pre-assembled. Nylon lock nuts will not fully screw onto bolts, they must be wrench tightened to fully go on.

RIGHT SIDE ASSEMBLY

1A. Attach Middle Upright **(B)** & Rear Upright (C) to Base Frame **(A)** using:

6 - (#5) M10x20mm Button Head Cap Screw
6 - (#13) M10 Washer
6 - (#14) M10 Lock Washer

1B. Attach Front Chrome Upright **(D)** to Base Frames **(A)** using:

2 - (#3) M10x80mm Hex Head Bolt
4 - (#13) M10 Washer
2 - (#17) M10 Nylon Lock Nut

1C. Insert Right Sliding Handle **(H)** onto Front Chrome Upright **(D)**.

1D. Attach Front Chrome Upright **(D)**, Middle Upright **(B)** & Rear Upright **(C)** to Top Frame **(A)** using:

6 - (#5) M10x20mm Button Head Cap Screw
1 - (#3) M10x80mm Hex Head Bolt
8 - (#13) M10 Washer
6 - (#14) M10 Lock Washer
1 - (#17) M10 Nylon Lock Nut

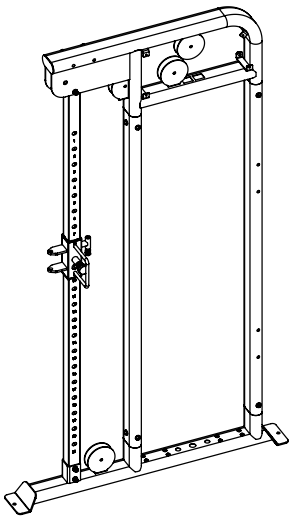

Above shows Step 1 assembled and completed.

STEP 1

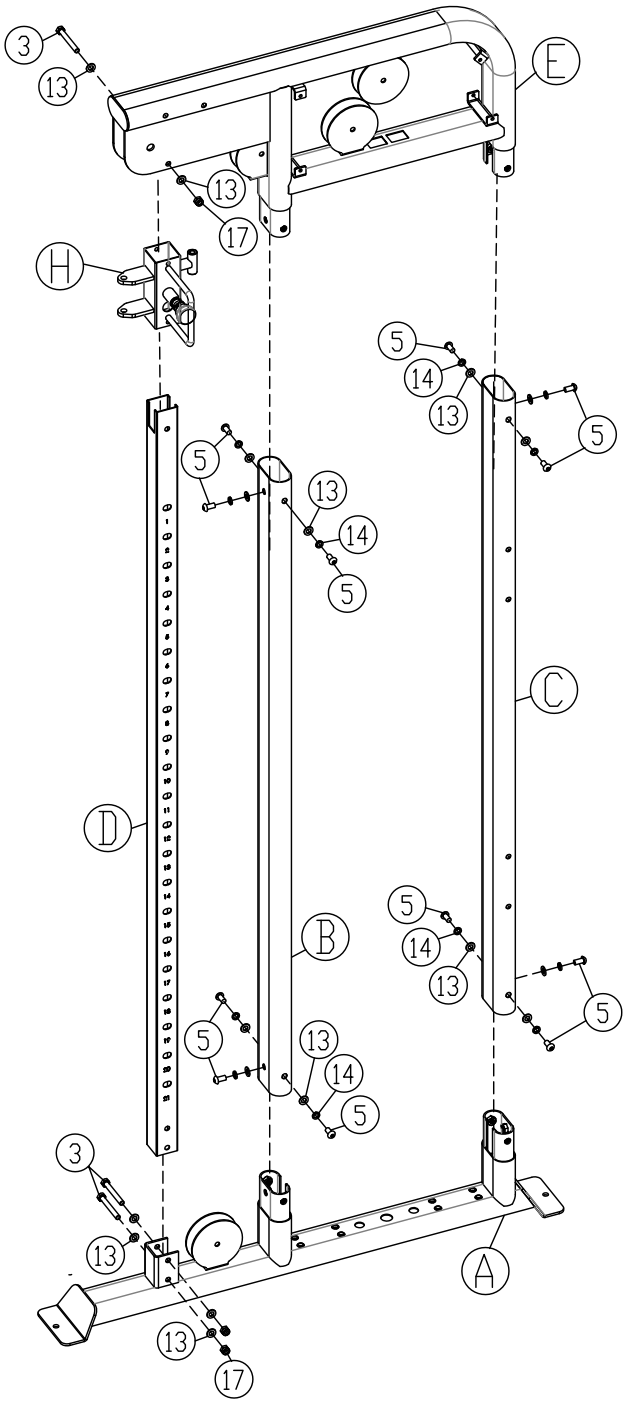

STEP 2

Be careful to assemble all components in the sequence they are presented.

NOTE:

Finger tighten all hardware in this step. DO NOT wrench tighten until instructed. Some components may be pre-assembled. Nylon lock nuts will not fully screw onto bolts, they must be wrench tightened to fully go on.

LEFT SIDE ASSEMBLY

2A. Attach Middle Upright **(B)** & Rear Upright (C) to Base Frame **(A)** using:

6 - (#5) M10x20mm Button Head Cap Screw
6 - (#13) M10 Washer
6 - (#14) M10 Lock Washer

2B. Attach Front Chrome Upright **(D)** to Base Frames **(A)** using:

2 - (#3) M10x80mm Hex Head Bolt
4 - (#13) M10 Washer
2 - (#17) M10 Nylon Lock Nut

2C. Insert Left Sliding Handle **(Q)** onto Front Chrome Upright **(D)**.

2D. Attach Front Chrome Upright **(D)**, Middle Upright **(B)** & Rear Upright **(C)** to Top Frame **(A)** using:

6 - (#5) M10x20mm Button Head Cap Screw
1 - (#3) M10x80mm Hex Head Bolt
8 - (#13) M10 Washer
6 - (#14) M10 Lock Washer
1 - (#17) M10 Nylon Lock Nut

STEP 2

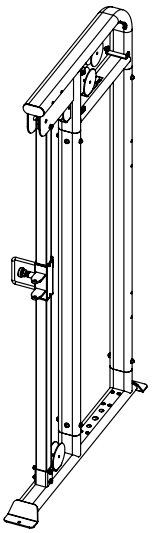

Above shows Step 2 assembled and completed.

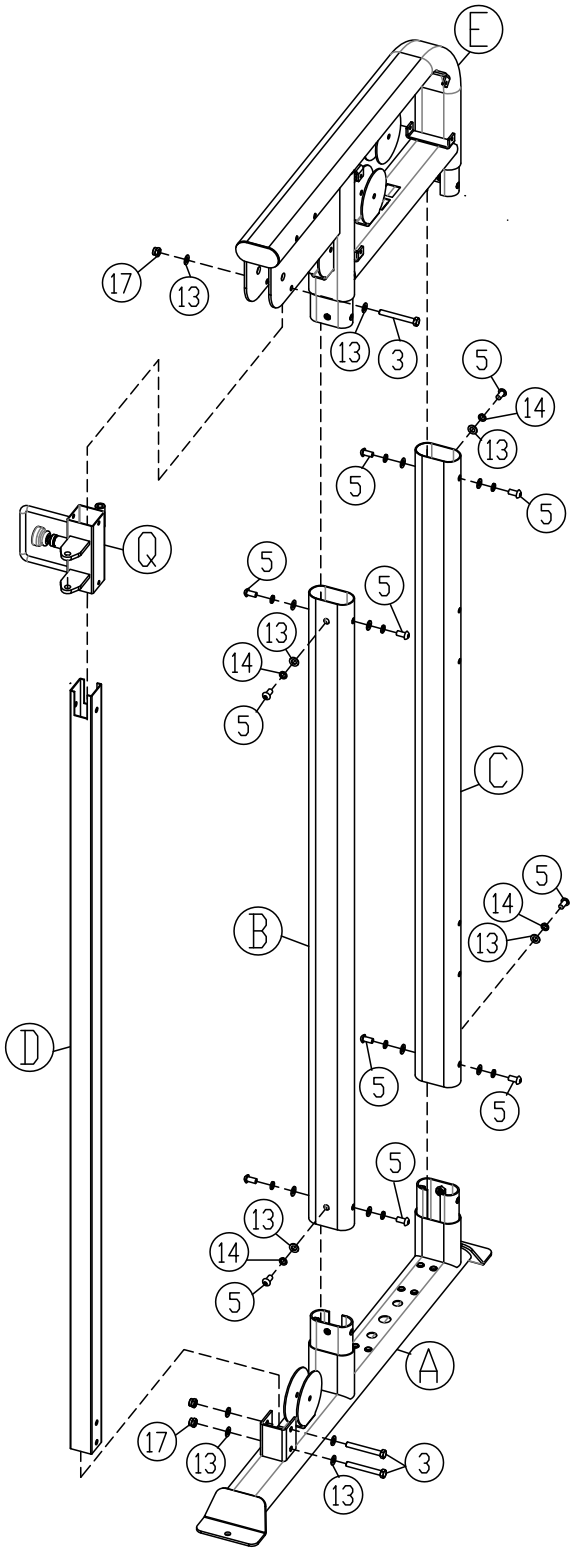

STEP 3

Be careful to assemble all components in the sequence they are presented.

NOTE:

Wrench tighten ALL hardware at the end of STEP 3E. Some components may be pre-assembled. Nylon lock nuts will not fully screw onto bolts, they must be wrench tighten to fully go on.

3A. Attach Two Center Crossmembers **(W)** to both Rear Uprights **(C)** using:

8 - (#2) M10x125mm Hex Head Bolt
16 - (#13) M10 Washer
8 - (#17) M10 Nylon Lock Nut
4 - (J) Upright Bracket

3B. Attach Chin Up Bar **(V)** to both Top Frames **(E)** using:

8 - (#2) M10x125mm Hex Head Bolt
16 - (#13) M10 Washer
8 - (#17) M10 Nylon Lock Nut
2 - (U) Chin Up Bar Bracket

3C. Attach Double Pulley Brackets **(G)** to both Sliding Handles **(H & Q)** using:

2 - (#1) M12x115mm Hex Head Bolt
4 - (#12) M12 Washer
2 - (#16) M12 Nylon Lock Nut
4 - (#36) Metal Bushing

3D. Attach Placard Plate **(P)** to Lower Center Crossmember **(W)** using:

2 - (#7) M8x70mm Hex Head Bolt
4 - (#15) M8 Washer
2 - (#18) M8 Nylon Lock Nut

3E. Attach Placard Plate **(P),** Storage Tray **(N)** and Upper Center Crossmember **(W)** together using:

2 - (#6) M8x75mm Hex Head Bolt
4 - (#15) M8 Washer
2 - (#18) M8 Nylon Lock Nut

STEP 3

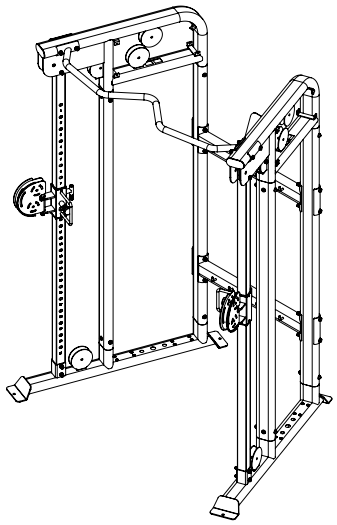

Above shows Step 3 assembled and completed.

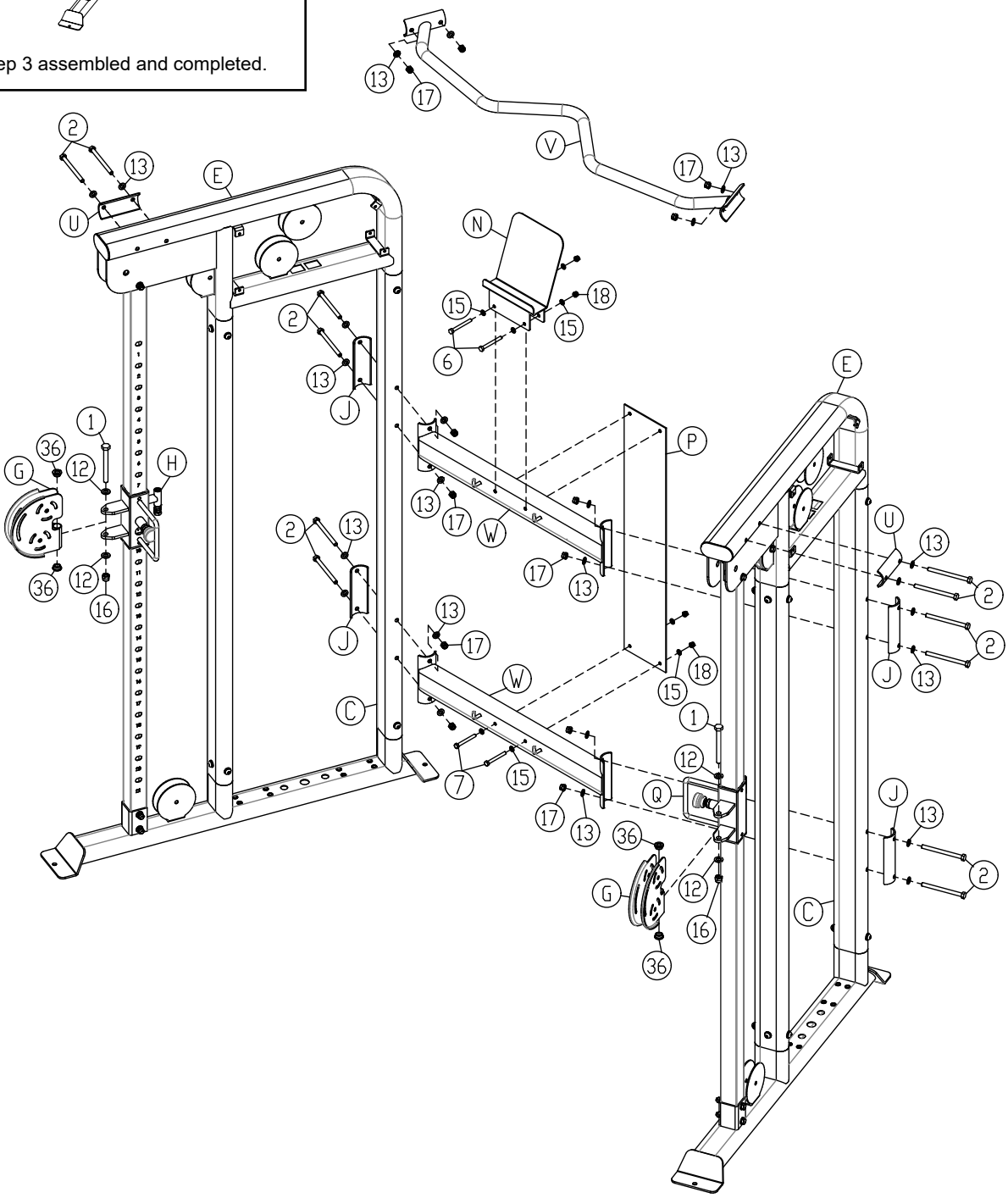

STEP 4

Be careful to assemble all components in the sequence they are presented.

NOTE:

Finger tighten all hardware in this step. DO NOT wrench tighten until instructed. Some components may be pre-assembled. Nylon lock nuts will not fully screw onto bolts, they must be wrench tightened to fully go on.

4A. Install Chrome Guide Rods **(F)** into the holes in the Base Frame **(A).**

4B. Attach Selector Rod **(#30)** to Top Plate **(#32)** using:
1 - (#11) M10x50mm SOCKET HEAD CAP SCREW
1 - (#14) M10 LOCK WASHER

4B. Install Weight Risers **(R)** & Rubber Donuts **(#31)** and slide to the bottom of the Guide Rods

IMPORTANT NOTE:

1. **If 20pcs of weight plates are to be installed, do not install Weight Risers (R)**

2. **If 20pcs of weight plates and Weight Stack Shrouds (GFT100SH) are to be installed, please read the assembly manual for instruction before you install the weight plates.**

4C. Tilt Guide Rods **(F)** away from the Base Frame **(A)** and install 15pcs of weight plates. Be careful to hold guide rods steadily when installing weight plates.

4D. Install Top Plate & Selector Rod Assembly **(#30)** onto the Guide Rods **(F)** .

4E. Install Weight Stack Pin (**#33)** using the key ring end through the Pulley Bracket **(K)**.

4F. Install M12 Hex Nut **(#19)**, M12 Lock Washer **(#20)** and Pulley Bracket **(K)** onto the Top Plate **(#30)**.

4G. Install Shaft Collars **(#37)** onto the Guide Rods **(F)**

4H. Slide Shaft Collars **(#37)** upward so they lock the guide rods into position by tightening the M8x8mm Set Screws **(#9).**

4J. Repeat the Same Steps **(4A to 4H)** on the other side of the machine.

STEP 4

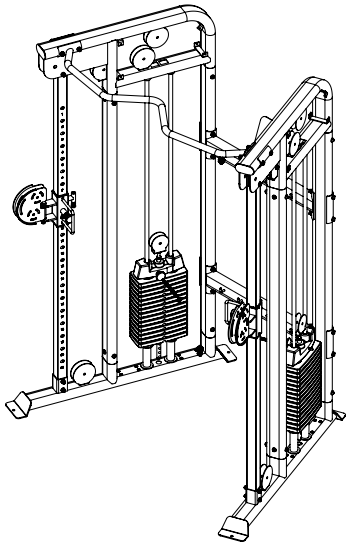

Above shows Step 4 assembled and completed.

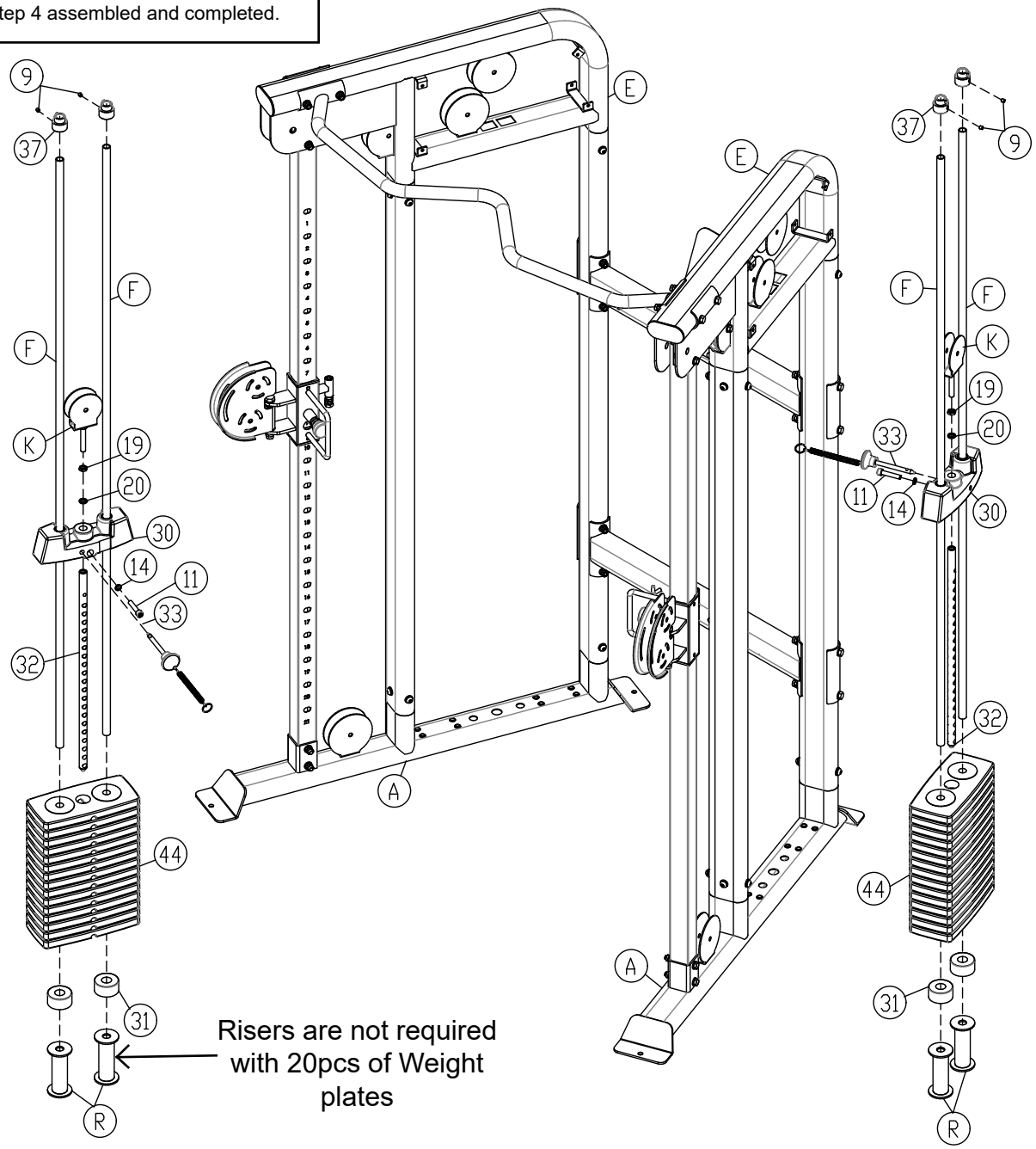

Risers are not required with 20pcs of Weight plates

STEP 5

Be careful to assemble all components in the sequence they are presented.

NOTE:

Wrench tighten ALL hardware at the end of STEP 5D. Some components may be pre-assembled. Nylon lock nuts will not fully screw onto bolts, they must be wrench tighten to fully go on.

5A. Route Cable **(#29)** while installing Two Aluminum Pulleys **(#23)**, One ø90mm Plastic Pulley and five ø117mm Plastic Pulley **(#22)** on the right side of the machine as shown in STEP 5 drawing using:

1 - (#3) M10x80mm Hex Head Bolt
7 - (#4) M10x50mm Hex Head Bolt
14 - (#13) M10 Washer
8 - (#17) M10 Nylon Lock Nut
2 - (#28) Pulley Spacer

5B. Screw in two M12 Hex Nuts **(#19)** into Cable Connector Bolt **(#25)** of the Cable **(#29)**.

5C. Attach the Cable Connector Bolt **(#25)** of the Cable **(#29)** to the Back of the Right Sliding Handle **(#H)** and secure the Cable **(#29)** by wrench tightening the two M12 Hex Nuts **(#19)**

5D. Repeat the previous Step **(5A-5C)** on the other side of the machine.

STEP 5

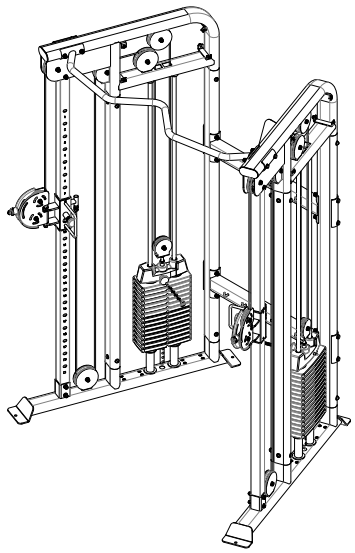

Above shows Step 5 assembled and completed.

STEP

6

Be careful to assemble all components in the sequence they are presented.

NOTE:

Some components may be pre-assembled. Nylon lock nuts will not fully screw onto bolts, they must be wrench tightened to fully go on.

6A. Attach Logo Plates **(T & S)** to Top Frames **(E)** using:

16 - (#8) M8x14mm Button Head Cap Screw
16 - (#15) M8 Washer
16 - (#21) M8 Lock Washer

6B. Attach Snap Links **(#41)** to Cables **(29)**.

6C. Attach Strap Handles **(#42)**, Tricep Rope **(#39)**, Long Straight Bar **(#38)** or Long Strap **(#40)** to Snap Links **(#41)**.

6D. Stick Exercise Placard **(#43)** on Placard Plate **(P)**.

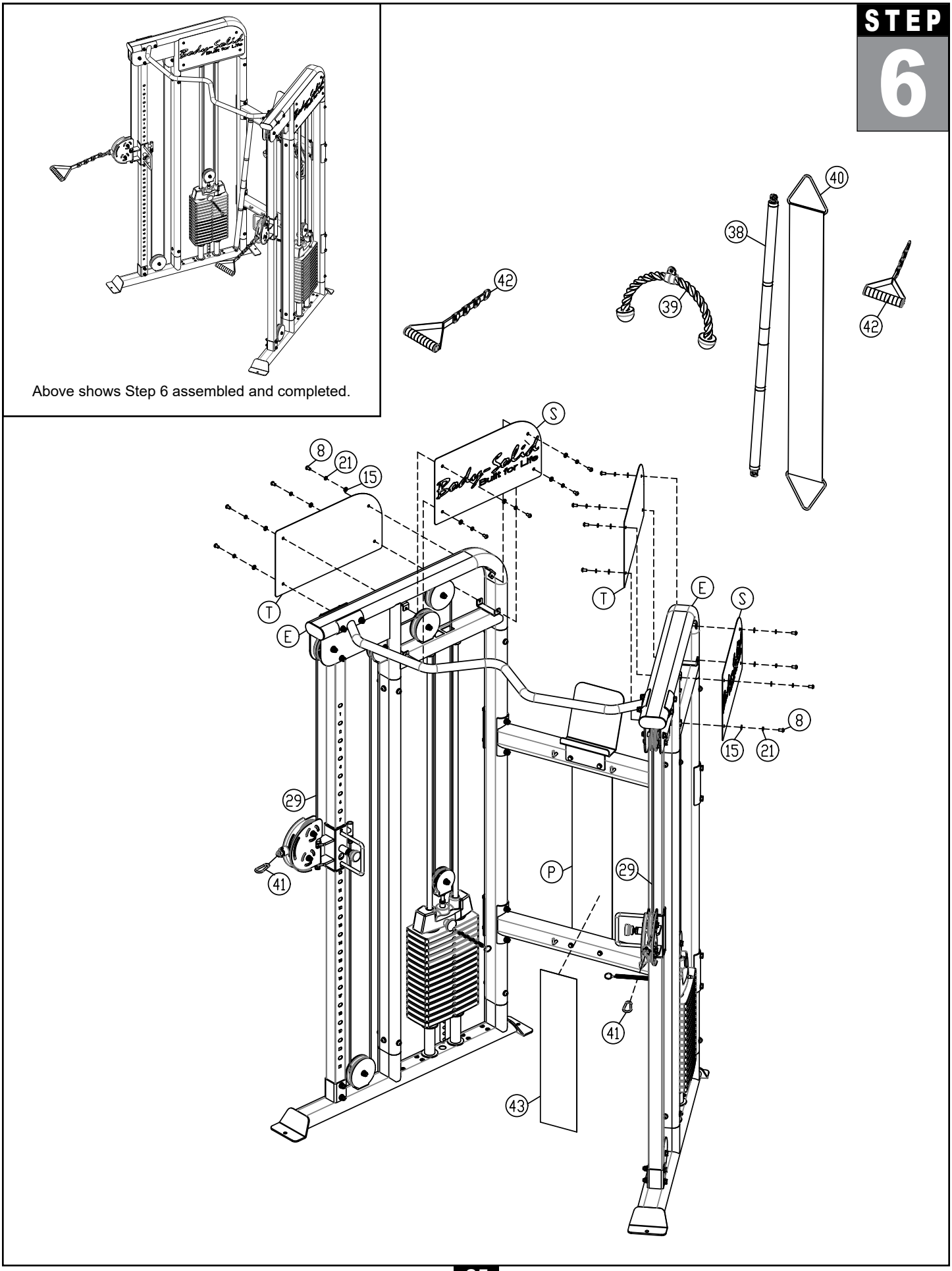
STEP
6
Above shows Step 6 assembled and completed.
40
38
42
39
42
S
8
21
15
T
E
T
E
S
8
15
21
29
41
P
29
41
43

GFT100N Exploded View (1)

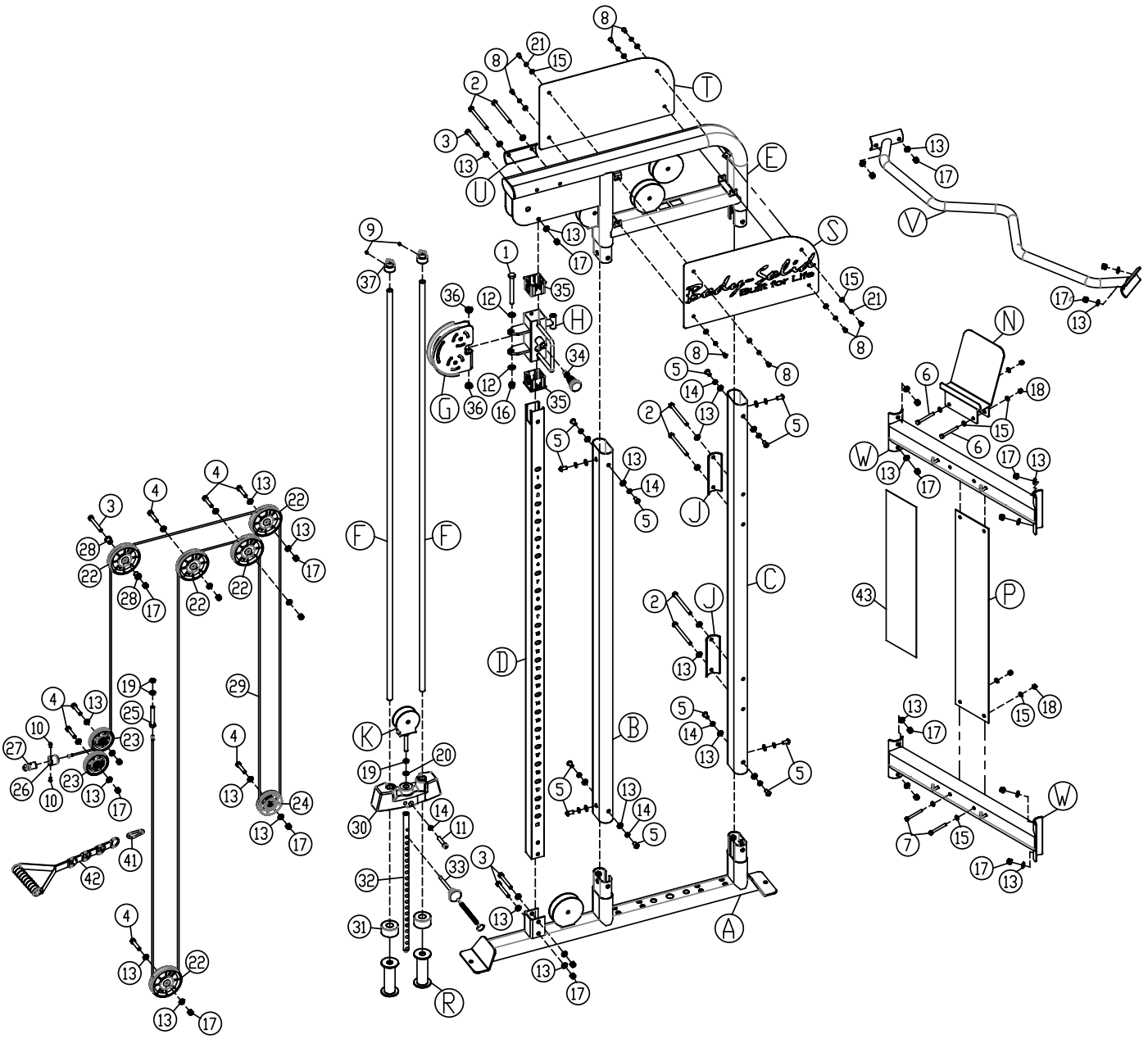

GFT100N Exploded View (2)

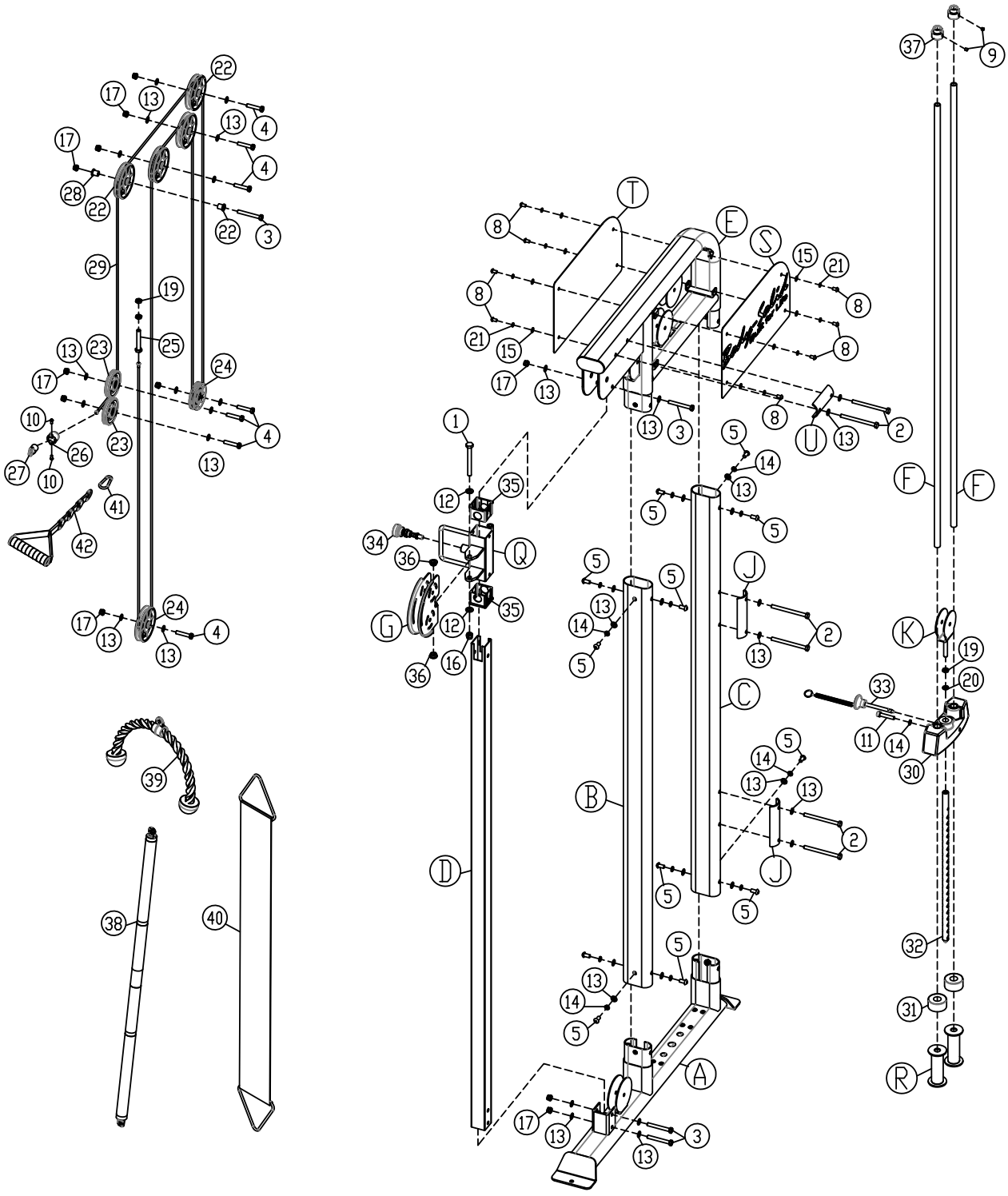

Body-Solid®
Built for Life

GFT100N

PLEASE WRITE YOUR SERIAL NUMBER IN THE BOXES BELOW

S/N # 021129-□□-□□-□□□□-□□□□

1900 S. Des Plaines Ave.
Forest Park, IL 60130
Phone:(708)427-3555
Fax:(708)427-3556
Hours: M-F 8:30 - 5:00 CST

www.bodysolid.com

Copyright 2009. Body-Solid. All rights reserved. Body-Solid reserves the right to change design and specifications when we feel it will improve the product. Body-Solid machines maintain several patented and patent pending features and designs. All rights reserved on all design patents and utility patents.